NOTE: 1. FORM FROM 3.43 THICK PLATE THAT IS 290 WIDE AND 4060 LONG.

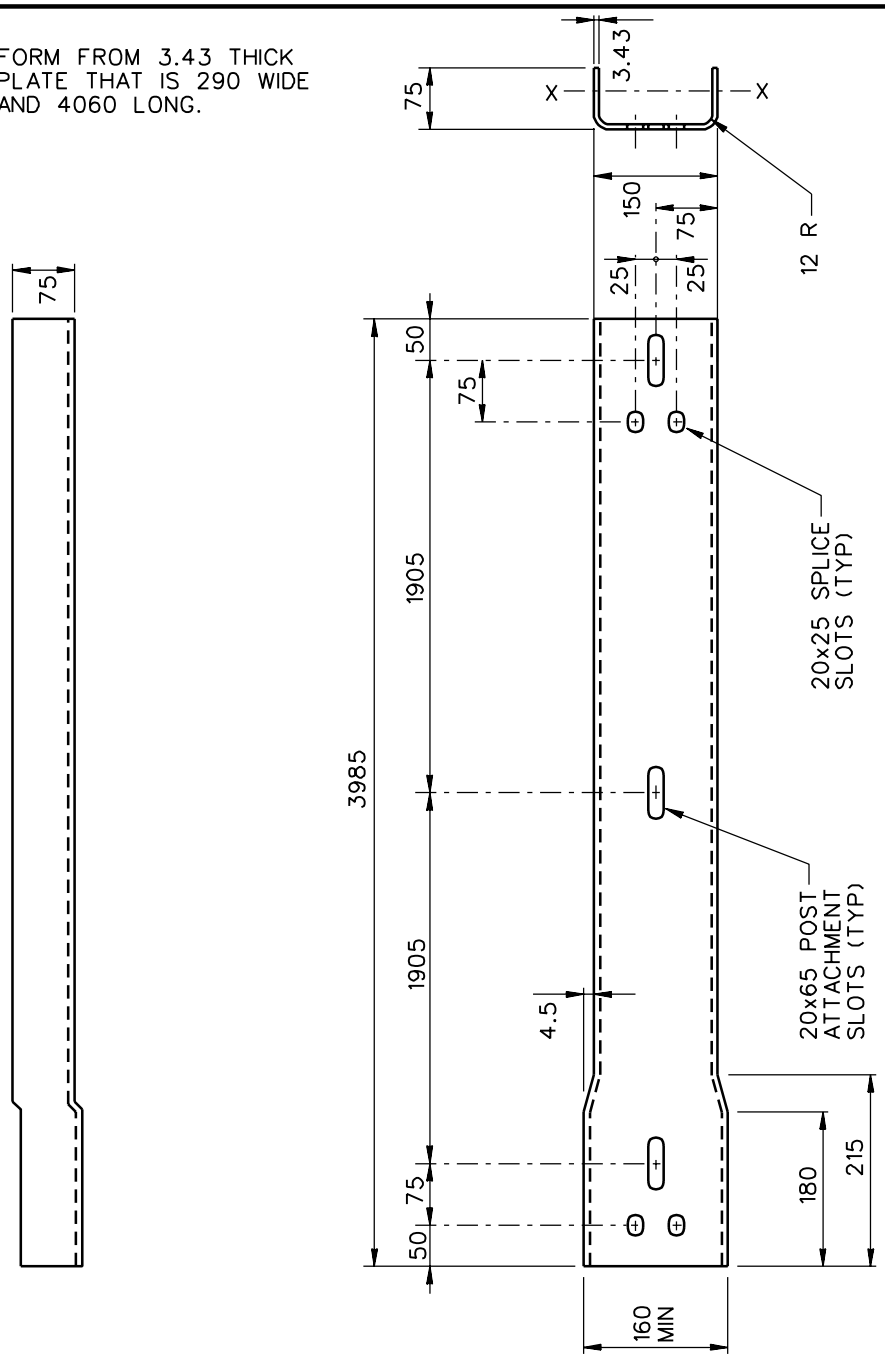

1994

BENT PLATE RUB RAIL

RER01	
SHEET NO.	REF. NO.
1 of 2	RE-72-76